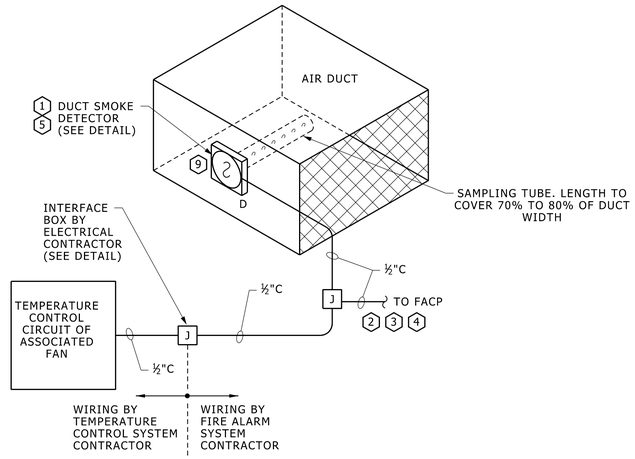

INTERFACE CIRCUIT LAYOUT

NO SCALE

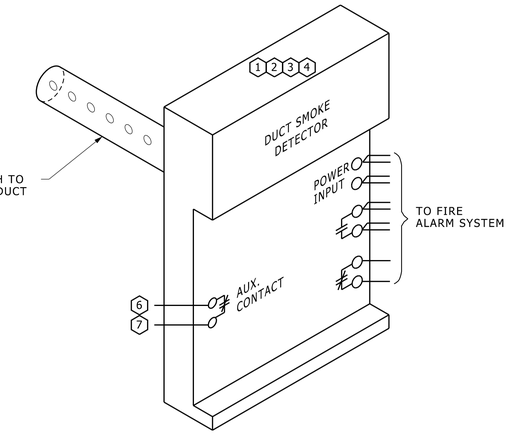

DUCT SMOKE DETECTOR INSTALLATION DETAIL

NO SCALE

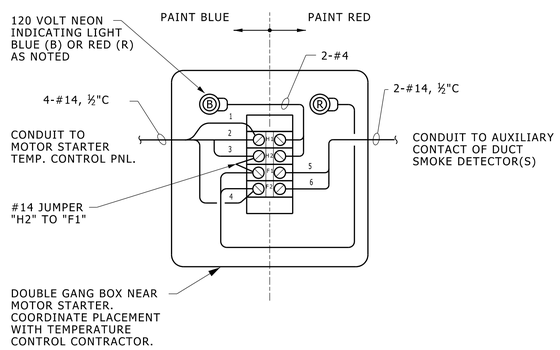

FIRE ALARM TO TEMPERATURE CONTROL INTERFACE BOX DETAIL

NO SCALE

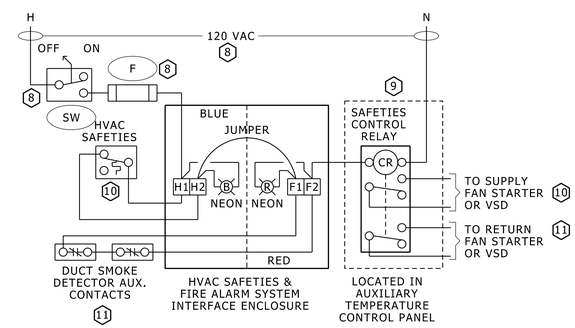

INTERFACE BOX WIRING DETAIL

NO SCALE

REFERENCE NOTES

1. DETECTOR SHALL BE SUPPLIED AND WIRED BY THE FIRE ALARM SYSTEM CONTRACTOR.
2. DETECTOR SHALL BE WIRED TO IT'S OWN ZONE.
3. DETECTOR SHALL BE RESETTABLE FROM THE FIRE ALARM CONTROL PANEL.
4. UPDATE FIRE ALARM SYSTEM ANNUNCIATOR AND ZONE LIST FOR EACH DUCT SMOKE DETECTOR.
5. DETECTOR SHALL HAVE AUXILIARY RELAY WITH NORMALLY CLOSED CONTACT.
6. ROUTE FIRE ALARM TO TEMPERATURE CONTROL BOX.
7. THERE IS TYPICALLY ONLY ONE DUCT SMOKE DETECTOR ON FAN SYSTEM. IF SYSTEM IS INTERLOCKED, RUN CONTACTS OF ASSOCIATED DUCT SMOKE DETECTORS IN SERIES.
8. PART OF MOTOR STARTER.
9. PART OF TEMPERATURE CONTROL PANEL.
10. PART OF TEMPERATURE CONTROL/FAN SYSTEM.
11. PRESENT ONLY WHEN REQUIRED BY HVAC DESIGN.

GENERAL NOTES

A. EXACT NUMBER OF CONDUCTORS DEPENDENT OF FIRE ALARM SYSTEM BEING USED. CONFIRM NUMBER AND TYPE REQUIRED AT EACH LOCATION WITH FIRE ALARM SYSTEM SUPPLIER.

B. USE 4" SQUARE DEEP BOX WITH 4 TERMINAL, TERMINAL STRIP INSTALLED INSIDE. STRIP TO BE 120 VOLT RATED.

C. INTERFACE BOX AND CONTROLLED OUTPUT DEVICE (OF FIRE ALARM SYSTEM) SHOULD BE CLOSE TO MOTOR STARTER OR TEMPERATURE CONTROL PANEL.

D. PAINT INTERFACE BOX EXTERIOR AND COVER RED AND BLUE; FIRE ALARM SYSTEM HALF IS RED, TEMPERATURE CONTROL SIDE IS BLUE

E. PLACE AND INSTALL DUCT SMOKE DETECTOR IN AN ACCESSIBLE LOCATIONS, AND IN FULL COMPLIANCE WITH SMOKE DETECTOR MANUFACTURER'S PLACEMENT AND INSTRUCTIONS.

"HARDWIRED" (DUMB) FIRE ALARM SYSTEM DEVICE INTERCONNECTION DETAIL DUCT SMOKE DETECTOR INTERFACE CONNECTION TO TEMPERATURE CONTROLS

NO SCALE

28310007.dgn