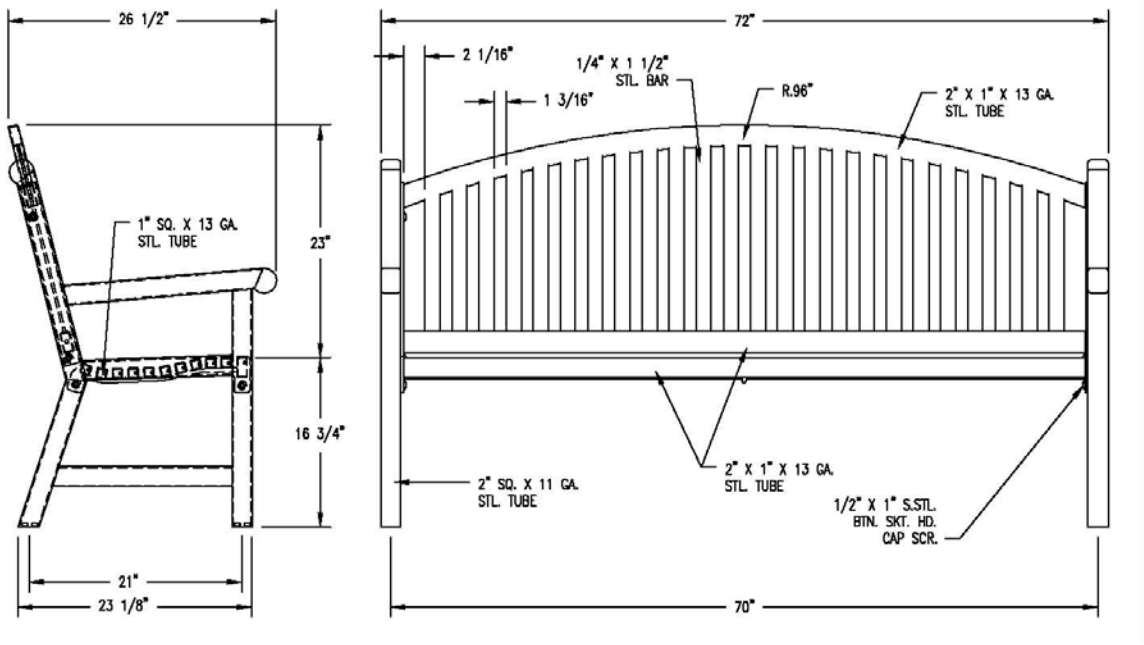

MEMORIAL BENCH OBTAINED FROM: DUMOR IN MIFFLINTOWN, PA
MODEL: STEEL 118-60/S-2

BLACK POWDERCOAT IS PREFERABLE.

OTHER MANUFACTURERS: LANDSCAPE FORMS IN KALAMAZOO, MI; VICTOR STANLEY IN DUNKIRK, MD; AND FORMS + SURFACES IN PITTSBURGH, PA.

REFER TO MEMORIAL BENCH GUIDELINES FOR MORE DETAILED INFORMATION
http://www.umaec.umich.edu/eedr/Guidelines%20for%20memorial%20benches%20FINAL%20July%202005.pdf

MEMORIAL BENCH