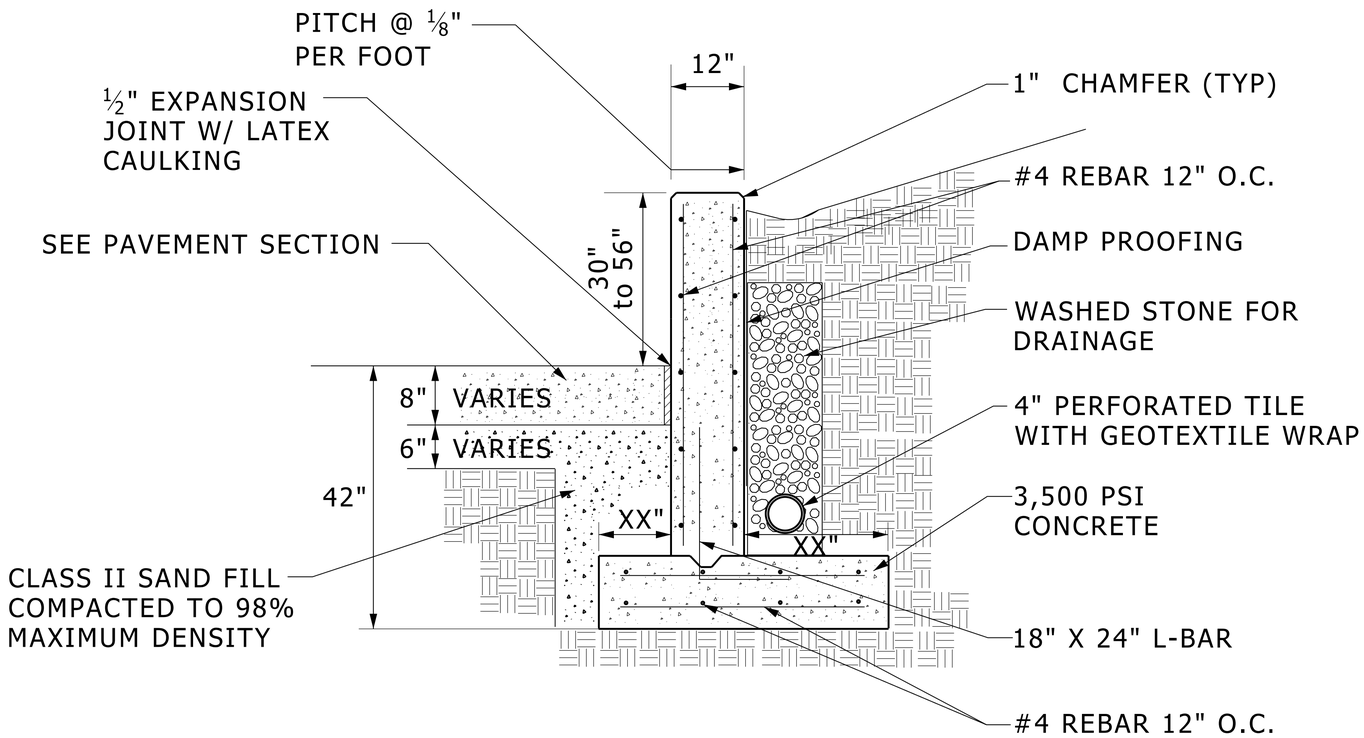

TYPICAL 30" TO 56" RETAINING WALL

NO SCALE

SD-WALL-RETAIN

NOTE TO DESIGNER:

1.WALL AND FOUNDATION AND REINFORCING STEEL SHALL BE ENGINEERED BY DESIGNER FOR ACTUAL SITE CONDITIONS
2.WALL CONTROL AND EXPANSION JOINTING TO BE CALLED OUT IN WALL PROFILES