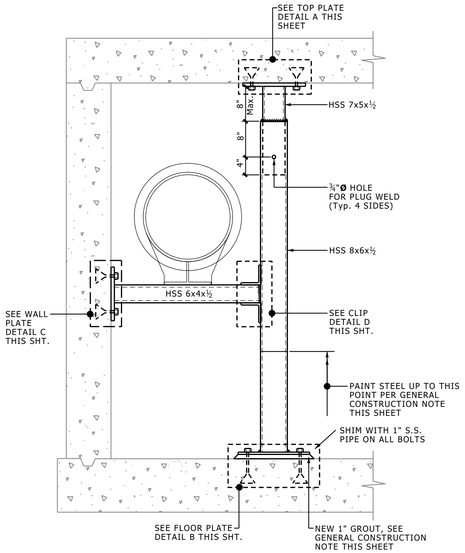

1 14" - 20" LPS & HPS ANCHOR & GUIDE STEEL SUPPORT

SCALE: ¾" = 1'-0"

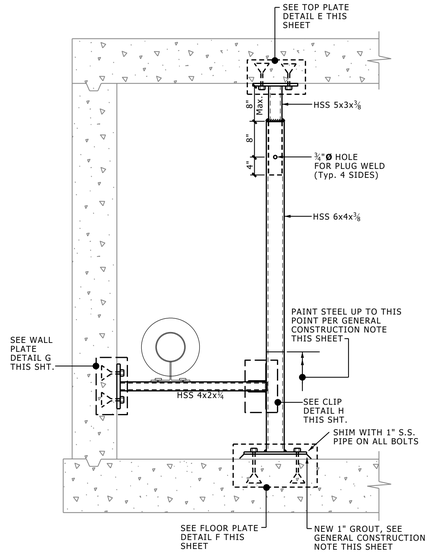

2 12" OR SMALLER PIPING ANCHOR & GUIDE STEEL SUPPORT

SCALE: ¾" = 1'-0"

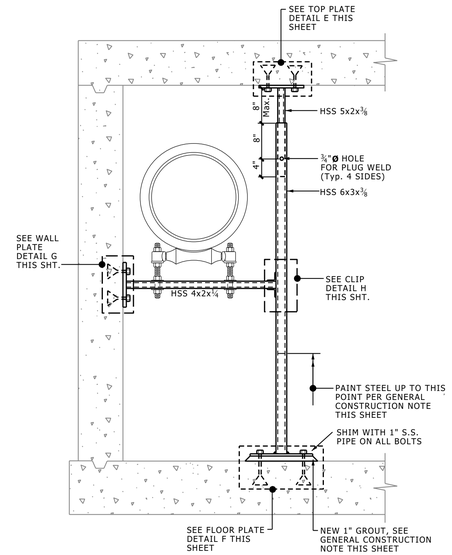

3 ROLLER & SLIDE STEEL SUPPORT

SCALE: ¾" = 1'-0"

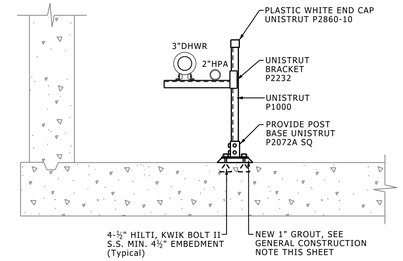

4 3" OR SMALLER PIPING ROLLER & SLIDE STEEL SUPPORT

SCALE: ¾" = 1'-0"

General Construction Note

ROUGHEN CONCRETE AND APPLY BONDING AGENT BEFORE PLACING A NON-SHRINK METALLIC GROUT BASE, MIN. 1" THICK (OR AS SHOWN ON DETAIL) OR CONCRETE BASE AS SHOWN OVER EXISTING FLOOR. NON-SHRINK GROUT: GROUT SHALL BE PREMIXED, NON-SHRINK NON-CATALYZED NATURAL AGGREGATE GROUT, FOR COLUMN LEVELING PLATES WHICH ARE NOT BOLTED DOWN BEFORE COLUMN ERECTION, AND OTHER STRUCTURAL LOAD BEARING APPLICATIONS, AND FOR ITEMS SETS INTO CONCRETE BLOCKOUTS OR DEPRESSIONS, OR SET INTO CONCRETE TOPPINGS. L&M "CRYSTEX", W.R. MEADOWS "588 GROUT", MASTER BUILDERS "MASTERFLOW 928 GROUT", OR DAYTON-SUPERIOR "HIGH PERFORMANCE". SEVEN-DAY COMPRESSIVE STRENGTH FOR THE SPECIFIED CONSISTENCY SHALL BE AT LEAST. 7,000 PSI PLASTIC, 6,000 PSI FLOWABLE, AND 5,000 PSI FLUID CONSISTENCY. PAINT UP TO 24" AFF, ALSO TOP & WALL PLATES WITH TWO COATS OF 'METALLIZE' POLYMER COATING BY DRUMMOND AMERICAN, ON ALL STEEL SUPPORTS, NOT FACTORY PAINTED. SURFACE PREPARATION AND APPLICATION PER MANUFACTURER INSTRUCTIONS. CLEAN/PREP EXISTING STEEL PER DETAIL PRIOR TO PAINTING. PAINT ALL STEEL, INCLUDING HORIZONTAL MEMBERS BELOW 24"AFF.

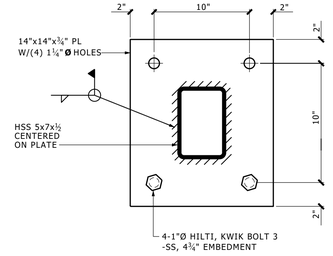

NOTE:
PAINT PLATE PER GENERAL CONSTRUCTION NOTE THIS SHEET.

A TOP PLATE DETAIL

NO SCALE

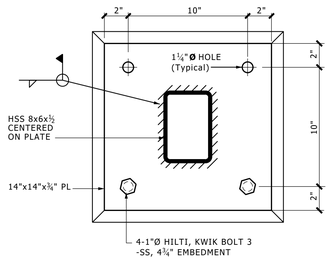

NOTE:
PAINT PLATE PER GENERAL CONSTRUCTION NOTE THIS SHEET.

B FLOOR PLATE DETAIL

NO SCALE

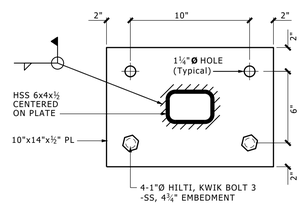

NOTE:
PAINT PLATE PER GENERAL CONSTRUCTION NOTE THIS SHEET.

C WALL PLATE DETAIL

NO SCALE

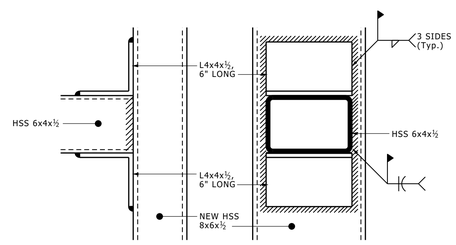

D CLIP DETAIL

NO SCALE

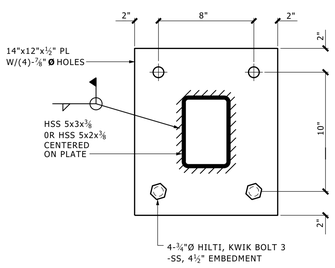

NOTE:
PAINT PLATE PER GENERAL CONSTRUCTION NOTE THIS SHEET.

E TOP PLATE DETAIL

NO SCALE

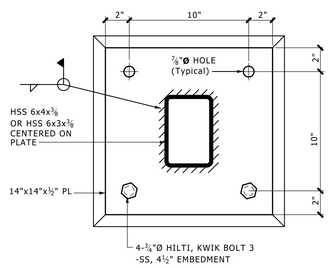

NOTE:
PAINT PLATE PER GENERAL CONSTRUCTION NOTE THIS SHEET.

F FLOOR PLATE DETAIL

NO SCALE

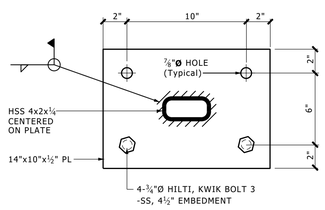

NOTE:
PAINT PLATE PER GENERAL CONSTRUCTION NOTE THIS SHEET.

G WALL PLATE DETAIL

NO SCALE

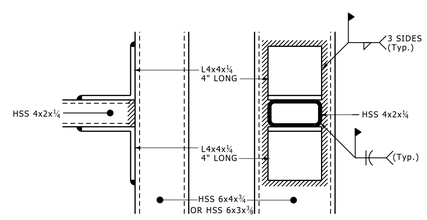

H CLIP DETAIL

NO SCALE

Note to Designers:

(1) PREFERRED STEEL SUPPORT DETAILS FOR EXISTING AND NEW TUNNELS ARE SHOWN IN THIS SHEET.

(2) DETAILS NOT INTENDED AS FINALIZED DESIGN. INTENT IS TO SHOW PREFERENCES IN CONSTRUCTION AND REQUIRED DEPTH OF DETAILS TO BE PROVIDED IN BID DOCUMENTS. DESIGN ENGINEER SHALL DETERMINE APPROPRIATE APPLICATION AND ADEQUACY.

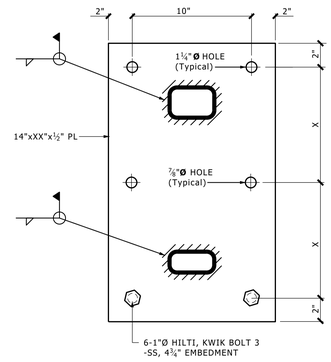

WALL PLATE USED WHEN (2) HORIZONTAL STEEL PIPE SUPPORTS ARE REQUIRED

NOTE:
PAINT PLATE PER GENERAL CONSTRUCTION NOTE THIS SHEET.

J WALL PLATE DETAIL

NO SCALE

SCALE: 3/4" = 1'-0"

1' 8" 4" 0 1' 2' 3'

UNIVERSITY OF MICHIGAN
ARCHITECTURE, ENGINEERING AND CONSTRUCTION
ARCHITECTURE & ENGINEERING
326 East Hoover, Mail Stop B
Ann Arbor, MI 48109-1002
Phone: 734-764-3414
Fax: 734-936-3334

TUNNEL TOOL-KIT

REFERENCE DETAILS, SUPPORTS & SECTIONS

For

Design Professionals Use if Deemed Applicable and Adequate for Project

Not For Construction

UM TUNNEL TOOL KIT REFERENCE DETAILS, SUPPORTS & SECTIONS

FOR DESIGN PROFESSIONAL USE IF DEEMED APPLICABLE & ADEQUATE

APPROVED BY: AEC - Architecture & Engineering (REPRESENTING)

PS/BB (DRAWN BY) — CAD (PROJECT LEAD)

CAD/BB (DESIGNED BY) — (REVIEWED BY)

MARK	ISSUED FOR/REVISIONS	DATE
•	Posted to Web	10/20/23
•	New Master	06/20/23
•	Draft Master for Review	05/08/23

Tunnels

Tool Kit

University Of Michigan
Ann Arbor , MI

UNIVERSITY OF MICHIGAN
ARCHITECTURE, ENGINEERING AND CONSTRUCTION
326 East Hoover, Mail Stop E
Ann Arbor, MI 48109-1002
Phone: 734-763-3020
Fax: 734-763-3238

P0000XXXX (U OF M PROJECT NO.) — XXXX (BUILDING NO.)

SHEET TITLE: **Tunnels**

Steel Supports Typical Sections & Details

SHEET NO.

TK-3

SHEET NO. 4 OF 13 — SHEET FILE NO. TK-3 04 15.dgn

10/19/2023 2:08:41 PM pschmand Q:\AES\PROJECT TYPES\TUNNELS\TUNNEL TOOL-KIT\CAD\TK-03 Rev 2023_10_20.dgn