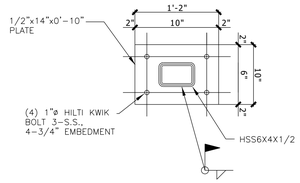

WALL PLATE
5 DETAIL
SCALE: 1" = 1'-0"

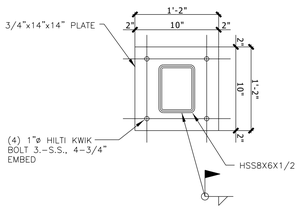

COLUMN TOP PLATE / BASE PLATE
4 SECTION
SCALE: 1" = 1'-0"

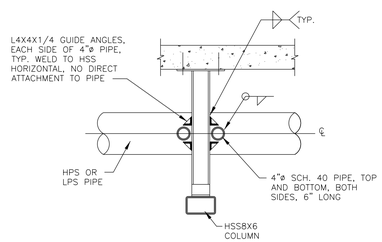

3 SECTION
SCALE: 1" = 1'-0"

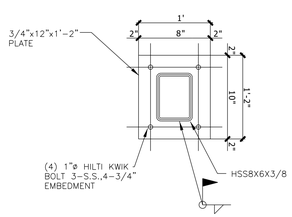

COLUMN TOP PLATE / BASE PLATE
2 SECTION
SCALE: 1" = 1'-0"

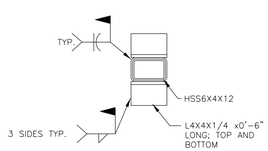

1 SECTION
SCALE: 1" = 1'-0"

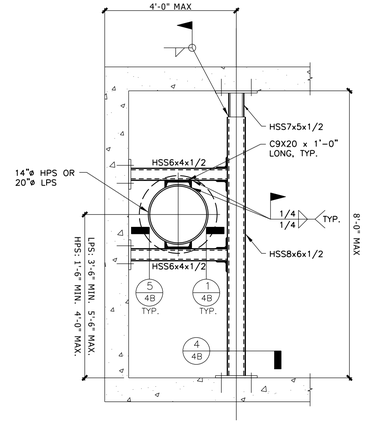

45-DEG TUNNEL ANCHOR
SCALE: 1/2" = 1'-0"

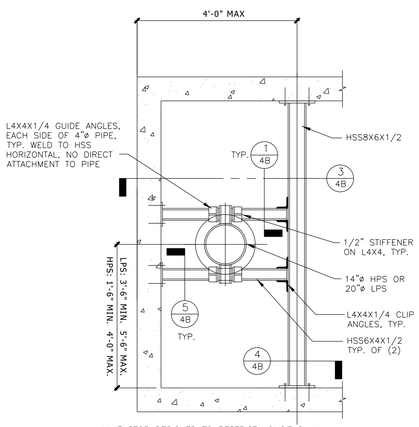

LIMIT STOP DESIGNED TO RESTRICT LONGITUDINAL AND LATERAL MOTION BUT ALLOW ROTATION
90-DEG LIMIT STOP
SCALE: 1/2" = 1'-0"

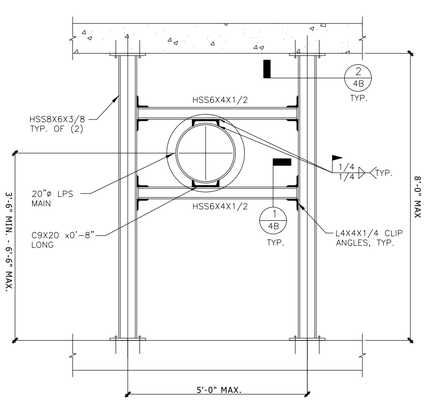

NOT TO BE COMBINED WITH OTHER PIPE SYSTEMS
LPS BRANCH ANCHOR
SCALE: 1/2" = 1'-0"

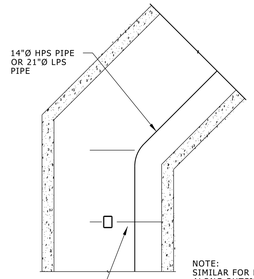

NOTE:
SIMILAR FOR PIPING LOCATED ALONG OUTSIDE WALL OF 45-DEGREE TUNNEL BEND. MINIMUM DISTANCE OF 2'-0" FROM CORNER NOT APPLICABLE FOR OUTSIDE WALL CONFIGURATION

45-DEGREE TUNNEL BEND
ENLARGED PLAN
NO SCALE

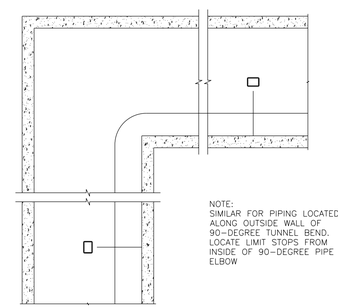

NOTE:
SIMILAR FOR PIPING LOCATED ALONG OUTSIDE WALL OF 90-DEGREE TUNNEL BEND. LOCATE LIMIT STOPS FROM INSIDE OF 90-DEGREE PIPE ELBOW

90-DEGREE TUNNEL BEND
ENLARGED PLAN
NO SCALE

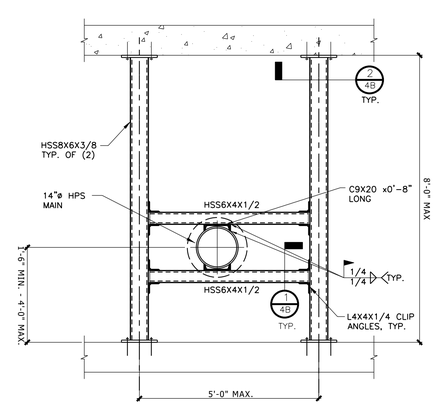

NOT TO BE COMBINED WITH OTHER PIPE SYSTEMS
HPS BRANCH ANCHOR
SCALE: 1/2" = 1'-0"

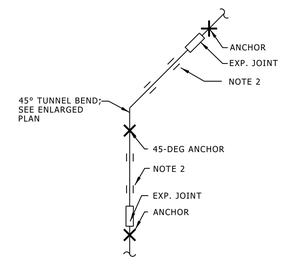

45-DEG TUNNEL BEND ANCHOR PIPING CONFIGURATION
NO SCALE

45-DEG TUNNEL BEND ANCHORS ARE EVALUATED FOR THE FOLLOWING PIPING CONFIGURATIONS:
- LOW PRESSURE STEAM (LPS): 20"ø MAIN LINE
- HIGH PRESSURE STEAM (HPS): 14"ø MAIN LINE

NOTES:
1. FIRST GUIDE TO BE LOCATED A MINIMUM OF 15'-0" AND MAXIMUM OF 25'-0" FROM 45-DEGREE PIPE BEND.
2. GUIDE PIPE ACCORDING TO EXPANSION JOINT MANUFACTURER'S REQUIREMENTS.

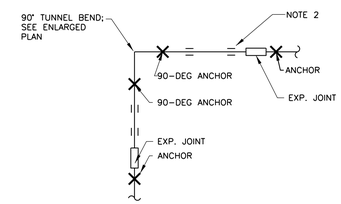

90-DEG TUNNEL BEND PIPING CONFIGURATION
NO SCALE

90-DEG TUNNEL BEND LIMIT STOPS ARE EVALUATED FOR THE FOLLOWING PIPING CONFIGURATIONS:
- LOW PRESSURE STEAM (LPS): 20"ø MAIN LINE
- HIGH PRESSURE STEAM (HPS): 14"ø MAIN LINE

NOTES:
1. NO GUIDES PERMITTED WITHIN 25'-0" OF 90-DEG LIMIT STOPS
2. GUIDE PIPE ACCORDING TO EXPANSION JOINT MANUFACTURER'S REQUIREMENTS.

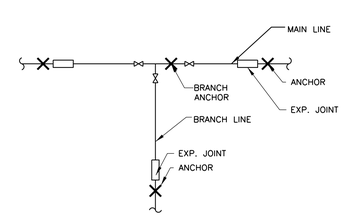

BRANCH ANCHOR PIPING CONFIGURATION
NO SCALE

BRANCH ANCHORS ARE EVALUATED FOR THE FOLLOWING PIPING CONFIGURATIONS:
- LOW PRESSURE STEAM (LPS): 20"ø MAIN LINE W/ 14"ø BRANCH LINE
- HIGH PRESSURE STEAM (HPS): 14"ø MAIN LINE W/ 12"ø BRANCH LINE
- ANY COMBINATION OF VALVES OPEN OR CLOSED

DESIGN DATA

DESIGN STRESSES

STRUCTURAL STEEL		
W-SHAPES	FY= 50,000	PSI
RECTANGULAR HSS	FY= 46,000	PSI
CIRCULAR HSS	FY= 42,000	PSI
ALL OTHERS	FY= 36,000	PSI
CONCRETE	f'c= 3,000	PSI MIN.

DESIGN LOADS FOR EXPANSION

STEAM - HIGH PRESSURE & LOW PRESSURE	450° F
CONDENSATE	250° F
AMBIENT TEMPERATURE	70° F

DESIGN CRITERIA

1. EXPANSION JOINT FRICTION FORCE BASED ON HYSPAN PERMA PAX, SLIP TYPE EXPANSION JOINTS. FRICTION FORCE IS EQUAL TO 1250# x PIPE DIAMETER. ADVANCE THERMAL THERMAL PAK TYPE "TP2" JOINTS HAVE A PUBLISHED FRICTION VALUE EQUAL TO 1000# xPIPE DIAMETER.
2. LOW PRESSURE STEAM BASED ON 15 PSI. HIGH PRESSURE STEAM BASED ON 60 PSI.
3. DESIGN TEMPERATURE IS EVALUATED AT 600° F FOR BOTH HIGH PRESSURE STEAM AND LOW PRESSURE STEAM. AMBIENT TEMPERATURE IS ASSUMED AT 70° F.
4. PIPE SUPPORT FRICTION BASED ON 250 FEET BETWEEN ANCHORS.
5. INTERMEDIATE ANCHORS ARE THOSE WHERE PIPING RUNS STRAIGHT THROUGH AN ANCHOR POINT WITHOUT VALVES OR CHANGE IN DIRECTION AND NO BRANCH LINES ARE PRESENT. INTERMEDIATE ANCHORS ARE NOT DESIGNED FOR A PRESSURE COMPONENT SINCE IT'S ASSUMED NO VALVES ARE PRESENT. EXPANSION JOINT ON ONE SIDE OF ANCHOR ASSUMED TO BE AT 100% OF FRICTION VALUE WHILE EXPANSION JOINT ON OTHER SIDE OF ANCHOR ASSUMED TO HAVE JUST SLIPPED. HYSPAN PUBLISHES THE FRICTION VALUE JUST AFTER "BREAK AWAY" TO BE 50% OF JOINT FRICTION. SUPPORT FRICTION IS BASED ON AN ASSUMPTION THAT THE DISTANCE TO THE NEXT ANCHOR ON ONE SIDE IS HALF AS LONG AS ON THE OTHER SIDE.
6. THE MEAN STATIC COEFFICIENT OF FRICTION FOR THE PIPE SUPPORTS IS ASSUMED TO BE 0.35. THIS SHOULD BE AN ACCEPTABLE VALUE FOR STEEL ON STEEL. FRICTION VALUES CAN BE REDUCED BY 45% IF GRAPHITE TO GRAPHITE GUIDES AND SUPPORTS ARE USED.
7. DESIGN LOADS FOR ANCHOR CONFIGURATIONS OTHER THAN INTERMEDIATE ANCHORS ARE INDIVIDUALLY LISTED BELOW. ANCHOR AXIS CONVENTION IS AS FOLLOWS:

   a. Fx – LOADS ALONG X-AXIS, PARALLEL TO PIPE CENTERLINE.
   b. Fz – LOADS ALONG Z-AXIS, PERPENDICULAR TO PIPE CENTERLINE.
   c. MT – TORSIONAL MOMENT ABOUT VERTICAL AXIS OF ANCHOR.

8. 45° TUNNEL ANCHOR ARE ANCHORS LOCATED NEAR A 45-DEGREE BEND IN A TUNNEL, WITHOUT VALVES OR BRANCH LINES PRESENT. THIS SHEET SHOWS THE GENERAL PIPE CONFIGURATION EVALUATED, AND PROVIDES DIMENSIONAL CONSTRAINTS FOR THE ANCHOR FOR BOTH HPS AND LPS SERVICE. ANY DEVIATIONS FROM THE CONFIGURATIONS SHOWN REQUIRE FURTHER ENGINEERING. BASED ON THE DETAILED 45-DEGREE TUNNEL BEND ANCHOR, THE MAXIMUM ALLOWABLE LOADS ARE AS FOLLOWS:

   a. Fx = 22,000 LB. MAX.
   b. Fz = 22,000 LB. MAX.
   c. MT = 76,000 LB-FT MAX.

   THESE LOAD MAXIMUMS ARE APPLICABLE FOR HPS PIPES UP TO 14" IN DIAMETER OR LPS PIPES UP TO 20" IN DIAMETER.

9. 90° LIMIT STOP IS A LIMIT STOP DESIGNED FOR INSTALLATION AT EACH OF A 90-DEGREE BEND IN THE TUNNEL. THE LIMIT STOP IS DESIGNED TO RESTRICT PIPE MOVEMENT LATERALLY AND LONGITUDINALLY, WHILE ALLOWING SOME ROTATION OF THE PIPE THROUGH THE SUPPORT, RESULTING IN NO TORSIONAL MOMENT AT THE SUPPORT. THIS SHEET PROVIDES DIMENSIONAL CONSTRAINTS FOR THE LIMIT STOP CONFIGURATION, AS WELL AS LOCATION REQUIREMENTS WITH RELATION TO THE 90-DEGREE BEND IN THE TUNNEL. DEVIATIONS FROM THE CONFIGURATIONS AND LIMITATIONS SHOWN REQUIRE FURTHER ENGINEERING. BASED ON THE DETAILED 90-DEGREE TUNNEL BEND LIMIT STOP, THE MAXIMUM ALLOWABLE LOADS ARE AS FOLLOWS:

   a. HIGH PRESSURE STEAM UP TO 14" IN DIAMETER:
      i. Fx = 27,000 LB. MAX.
      ii. Fz = 4,000 LB. MAX.

   b. LOW PRESSURE STEAM UP TO 20" IN DIAMETER:
      i. Fx = 30,000 LB. MAX.
      ii. Fz = 7,000 LB. MAX.

10. BRANCH ANCHORS ARE INTENDED TO BE USED WHERE A PERPENDICULAR BRANCH LINE IS LOCATED NEAR A MAIN-LINE ANCHOR, AND PROVIDES ANCHORAGE FOR BOTH THE MAIN LINE PIPE AND THE BRANCH LINE PIPE. TWO BRANCH ANCHOR CONFIGURATIONS ARE DETAILED; ONE INTENDED FOR USE ON HIGH PRESSURE STEAM AND ONE INTENDED FOR USE FOR LOW PRESSURE STEAM SERVICE. DIMENSIONAL CONSTRAINTS FOR WHERE THE PIPING MAY BE LOCATED WITHIN THE ANCHOR CONFIGURATION ARE PROVIDED ON THE INDIVIDUAL DETAILS. DESIGNER MUST ALSO VERIFY THAT THE OVERALL LAYOUT OF THE BRANCH LINE / ANCHOR / AND MAIN LINE PIPING CONFORMS TO THE BRANCH ANCHOR PIPING CONFIGURATION SHOWN ON THIS SHEET. ANY DEVIATION FROM THESE CONFIGURATIONS WILL REQUIRE FURTHER ENGINEERING. BASED ON THE DETAILED BRANCH ANCHORS, THE MAXIMUM ALLOWABLE LOADS ARE AS FOLLOWS:

   a. HIGH PRESSURE STEAM UP TO 14" IN DIAMETER:
      i. Fx = 20,000 LB. MAX.
      ii. Fz = 18,000 LB. MAX.
      iii. MT = 31,000 LB-FT MAX.

   b. LOW PRESSURE STEAM UP TO 20" IN DIAMETER:
      i. Fx = 38,000 LB. MAX.
      ii. Fz = 21,000 LB. MAX.
      iii. MT = 38,000 LB-FT MAX.

UNIVERSITY OF MICHIGAN
ARCHITECTURE, ENGINEERING AND CONSTRUCTION
ARCHITECTURE & ENGINEERING
326 East Hoover, Mail Stop B
Ann Arbor, MI 48109-1002
Phone: 734-764-3414
Fax: 734-936-3334

TUNNEL TOOL-KIT

REFERENCE DETAILS, SUPPORTS & SECTIONS

For

Design Professionals Use if Deemed Applicable and Adequate for Project

Not For Construction

UM TUNNEL TOOL KIT REFERENCE DETAILS, SUPPORTS & SECTIONS

FOR DESIGN PROFESSIONAL USE IF DEEMED APPLICABLE & ADEQUATE

APPROVED BY: AEC - Architecture & Engineering
REPRESENTING
DRAWN BY: PS/BB — PROJECT LEAD: CAD
DESIGNED BY: CAD/BB — REVIEWED BY:

MARK	ISSUED FOR/REVISIONS	DATE
•	Posted to Web	• 10/20/23
•	New Master	• 06/20/23
•	Draft Master for Review	• 05/08/23

Tunnels

Tool Kit

University Of Michigan
Ann Arbor , MI

UNIVERSITY OF MICHIGAN
ARCHITECTURE, ENGINEERING AND CONSTRUCTION
326 East Hoover, Mail Stop E
Ann Arbor, MI 48109-1002
Phone: 734-763-3020
Fax: 734-763-3238

U OF M PROJECT NO. P0000XXXX — BUILDING NO. XXXX

SHEET TITLE: TUNNELS

Pipe Bends & Branch Anchors Typical Supports, Sections & Details

SHEET NO.
TK-4

SHEET NO. 6 OF 13 — SHEET FILE NO. TK-04B 04 15.dgn

10/19/2023 1:39:59 PM pschmand Q:\AES\PROJECT TYPES\TUNNELS\TUNNEL TOOL-KIT\CAD\TK-04 Rev 2023_10_20.dgn