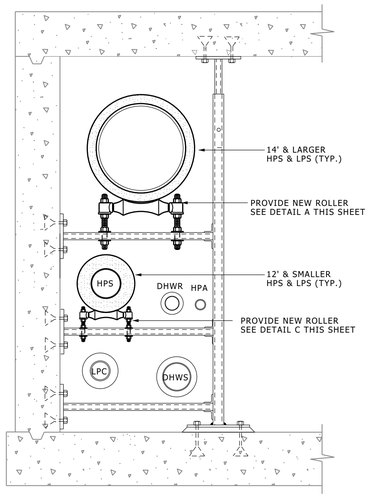

LPS & HPS TYPICAL ROLLER SECTION

SCALE: ¾" = 1'-0"

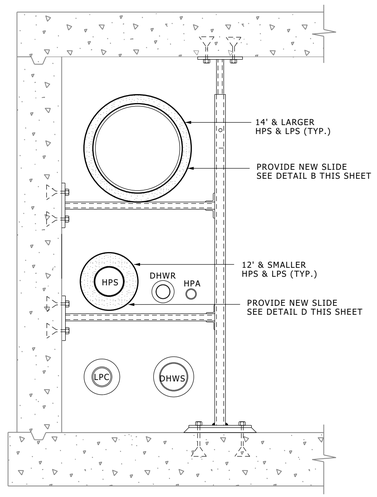

LPS & HPS TYPICAL SLIDE SECTION

SCALE: ¾" = 1'-0"

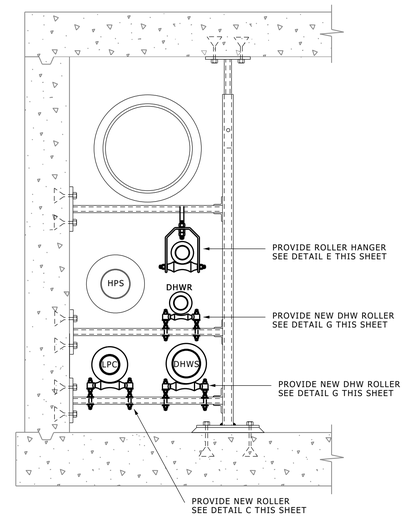

12" OR SMALLER PIPING TYPICAL ROLLER SECTION

SCALE: ¾" = 1'-0"

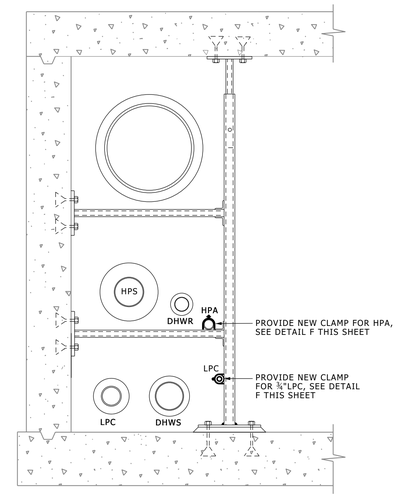

TRAP & HPA PIPING TYPICAL CLAMP SECTION

SCALE: ¾" = 1'-0"

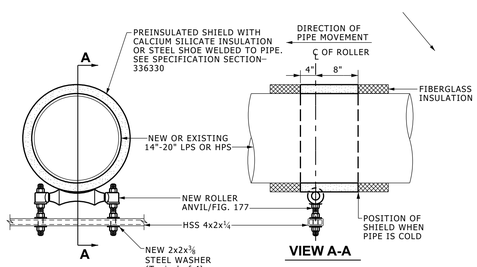

A LPS/HPS ROLLER DETAIL
NO SCALE

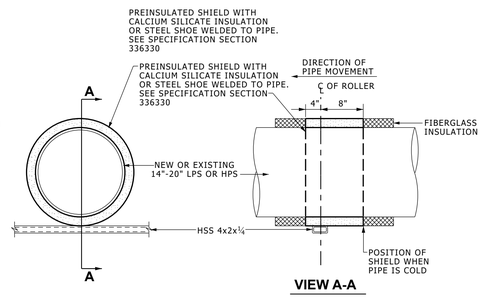

B LPS/HPS SLIDE DETAIL
NO SCALE

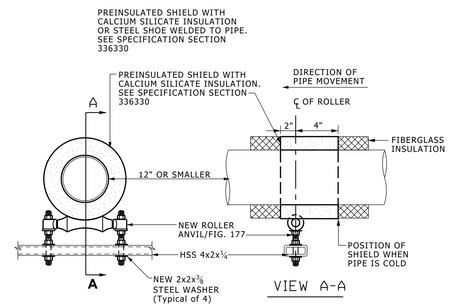

C 12" OR SMALLER ROLLER DETAIL
NO SCALE

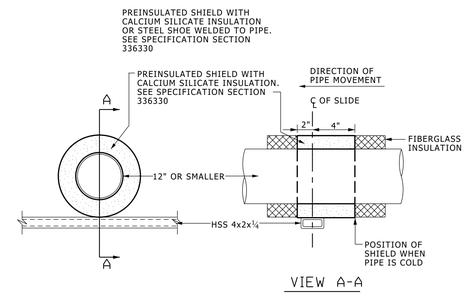

D 12" OR SMALLER SLIDE DETAIL
NO SCALE

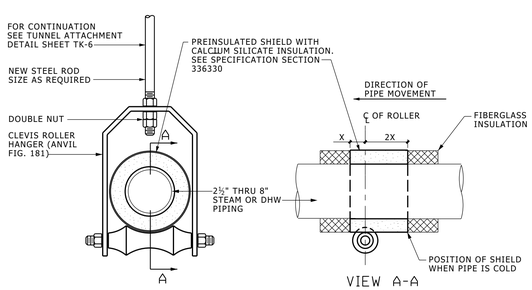

E ROLLER HANGER DETAIL
NO SCALE

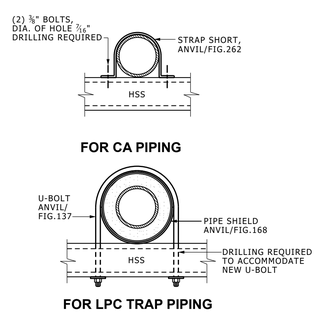

F CLAMP DETAILS
NO SCALE

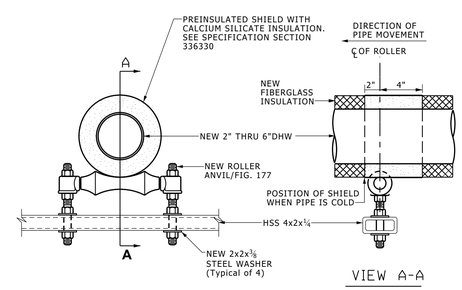

G DHW ROLLER DETAIL
NO SCALE

Note to Designers:

(1) PREFERRED STEEL SUPPORT DETAILS FOR EXISTING AND NEW TUNNELS ARE SHOWN IN THIS SHEET.
(2) DETAILS NOT INTENDED AS FINALIZED DESIGN. INTENT IS TO SHOW PREFERENCES IN CONSTRUCTION AND REQUIRED LEVEL/DEPTH OF DETAILS TO BE PROVIDED IN BID DOCUMENTS. DESIGN ENGINEER SHALL DETERMINE APPROPRIATE APPLICATION AND ADEQUACY.

NOTE:
THICKNESS OF ALL CALCIUM SILICATE INSULATION SHALL MATCH ADJACENT PIPING INSULATION.

ALL OF THE DETAILS SHOWN IN THIS SHEET WILL WORK FOR NEW TUNNELS WITH PROPER CROSSMEMBER PLACEMENT.

UNIVERSITY OF MICHIGAN
ARCHITECTURE, ENGINEERING AND CONSTRUCTION
ARCHITECTURE & ENGINEERING
326 East Hoover, Mail Stop B
Ann Arbor, MI 48109-1002
Phone: 734-764-3414
Fax: 734-936-3334

TUNNEL TOOL-KIT

REFERENCE DETAILS, SUPPORTS & SECTIONS

For

Design Professionals Use if Deemed Applicable and Adequate for Project

Not For Construction

UM TUNNEL TOOL KIT REFERENCE DETAILS, SUPPORTS & SECTIONS
FOR DESIGN PROFESSIONAL USE IF DEEMED APPLICABLE & ADEQUATE
APPROVED BY
AEC - Architecture & Engineering
REPRESENTING
PS/BB — DRAWN BY
CAD — PROJECT LEAD
CAD/BB — DESIGNED BY
REVIEWED BY

MARK	ISSUED FOR/REVISIONS	DATE
•	Posted to Web	10/20/23
•	New Master	06/20/23
•	Draft Master for Review	05/08/23

Tunnels

Tool Kit

University Of Michigan
Ann Arbor , MI

UNIVERSITY OF MICHIGAN
ARCHITECTURE, ENGINEERING AND CONSTRUCTION
326 East Hoover, Mail Stop E
Ann Arbor, MI 48109-1002
Phone: 734-763-3020
Fax: 734-763-3238

P0000XXXX — U OF M PROJECT NO.
XXXX — BUILDING NO.

SHEET TITLE: **Mechanical**

Rollers, Slides & Clamps - Typical Sections & Details New Construction

SHEET NO.
TK-5
SHEET NO. OF 13 SHEET FILE NO.

10/19/2023 1:42:36 PM pschmand Q:\AES\PROJECT TYPES\TUNNELS\TUNNEL TOOL-KIT\CAD\TK-05 Rev 2023_10_20.dgn